www.ijaceeonline.com ISSN: 2456 - 3935
International Journal of Advances in Computer and Electronics Engineering
Volume 3, Issue 10, October 2018, pp. 7–12

Energy Efficient Routing Protocol for Wireless Sensor Networks: Survey

Sara Raed Abd
PG Scholar, College of Engineering, Computer Engineering Department,
University of Mosul, Iraq
Email: sararaed1@outlook.com

Salah Abdulghani Alabady
Senior Lecturer, College of Engineering, Computer Engineering Department,
University of Mosul, Iraq
Email: eng.salah@uomosul.edu.iq

Abstract: *In Wireless Sensor Network (WSN), a large amount of energy in nodes is consumed due to the inner-network communications. Routing plays an important role in WSN because 70% of the total energy is consumed in data transmission and forward the packets from the source to sink. One a major concern in WSNs is the energy conservation and consumption. There are different strategies to reduce the energy consumption; long-distance communication should be avoided to prolong network life time, load-balancing increase network lifetime and mutlihop communication. Recently, numerous energy efficient routing protocols and strategies have been proposed for WSNs to reduce the energy consumption. In this paper, energy efficient routing protocols are classified under three categories based on the underlying network structure: flat, hierarchical, and location-based-routing. The main protocols explored in this paper are SPIN, DD, LEACH, OLEACH, HEED, Energy-LEACH, Multihop-LEACH, I-LEACH, PEGASIS, and TEEN. Each routing protocol is described and discussed under the appropriate category.*

Keyword: *WSN; Routing Protocol; LEACH; Energy Efficient Routing; HEED*

1. INTRODUCTION

Wireless Sensor Network (WSN) is one of the most essential technologies in this century. It works without the need for human intervention. It can work in harsh environments and remote places. WSNs are used to measure specific environmental parameters such as temperature, pressure, motion, sound, etc. [1]. These types of networks consisting of many small, low power and low-cost wireless sensor nodes that monitor the environment and send sensing data to the Base Station (BS). The main units of a typical sensor node are a sensor, processor, radio transceiver (communication unit), and a power unit (typically AA battery). Sensor nodes suffer from the limitations of energy resources. This is considered the biggest challenge facing the work of these sensor nodes because they must work with as little energy as possible and must use energy sparingly to save energy and increase an overall network lifetime. The communication unit of the sensor node loses the most of the energy used by sensor nodes. So, research in WSN needs to make a routing protocol that ensures the least amount of energy consumption and careful use of the energy resources when communication. In addition, sensor nodes may be deployed in inaccessible place, and replacement of the energy source is not feasible. WSN were used for many applications such as military, health care [2], industrial [3] and agricultural [4].

Many routing protocol have been specifically designed for WSNs where energy is an important metric in design issue [5]. Generally, the routing techniques are classified under three categories based on the underlying network structure: Flat, Hierarchical, and Location-Based-Routing. In flat-based routing, all nodes have the same functions in the network. In hierarchical-based routing, nodes play different roles within the network. In location based routing, sensor nodes must be aware of location to route data through the network by using GPS or any other technic. Furthermore, these protocols can be classified into multi-path-based, query-based, and negotiation-based, QoS-based, or coherent-based routing techniques depending upon the protocol operation.

Routing in WSN faces a number of challenges such as; network may contain a large number of sensor nodes and deployment in ad-hoc manner, sensor nodes may fail, all nodes send data directly or indirectly to the BS, the power source is limited, and in

Cite this paper:

Sara Raed Abd, Salah Abdulghani Alabady, "Energy Efficient Routing Protocol for Wireless Sensor Networks: Survey", International Journal of Advances in Computer and Electronics Engineering, Vol. 3, No. 10, pp. 7-12, October 2018.

ISSN: 2456 - 3935
International Journal of Advances in Computer and Electronics Engineering
Volume 3, Issue 10, October 2018, pp. 7–12

some applications, sensor nodes have the ability to move and change their location [6].

Section 2 gives an overview of existing routing protocols. Section 3 concludes the survey.

2. RELATED WORK

Many routing protocols are designed for WSN but limitations of the energy resources make routing a most critical issue in WSN. Energy efficiency is the main metric in WSN to make compromise or comparison among routing protocol. Routing protocols are classified according to the network organization into three kinds: Flat, Location, and Hierarchical based routing.

2.1 Flat-Based Routing

In the flat protocol each node acts with the same role. The author in [7] gives the detailed survey of flat routing protocols such as Sensor Protocols for Information via Negotiation (SPIN), directed diffusion (DD) save energy through data negotiation. The negotiation mechanism of SPIN [8] is accomplished using three kinds of messages, advertisement (ADV), request (REQ), and DATA. These messages guarantee that there is no redundant data sent through the network. The ADV message includes a description of the DATA packet to be transmitted. ADV is smaller than the DATA packet. REQ message replies from the neighbor node that it is interested in the ADV. DATA packet is transmitting to the node that requests it. The neighbor sensor node then repeats this procedure with its neighbors nodes. An outcome, the whole sensor area will receive a copy of the data. In addition, SPIN has access to the current energy level of the node and adapts the protocol it is running based on how much energy is remaining.

The SPIN family is designed to overcome the problem of classic flooding by negotiation. Flooding routing protocols waste energy when sending unnecessary copies of data to all neighbor nodes. However, the data will not be delivered to the receiver, in case the nodes that are interested in that data are far from the transmitter node, and the nodes between transmitter and receiver are not interested in that data. Other protocols of the SPIN family are SPIN-BC, SPIN-PP, SPIN-EC, and SPIN-RL. SPIN provides traffic flow started from the sensors and typically at the BS. That means this form of protocols sometimes not suitable for some application when the BS needs particular data from the sensors. Directed diffusion [9] is developed to overcome this problem by interest messages started by the receiver and flood through the network. Interest messages describe a task required to be done by the network. The interest message is broadcast periodically during the task by the sink node. Each node receiving the interest message stores it in cash for later use and forwards the message to its neighbors. The interest message contains timestamp, gradient, interval, and duration. The timestamp shows the time that the interest message was received. The gradient shows the node from where the interest message is received. The duration shows the specific time of interest message survival in cash. Several paths can be established between sink and source node so that one of them is selected for data exchange. Another path is used when the selected path fails. Some applications required continuous flow of data; in that case the directed diffusion is unsuitable. Formerly, SPIN and Directed diffusion are not energy efficient routing protocols, and not good choice for WSN operates an inaccessible place.

2.2 Location Based Routing

Sensor nodes within the network must know its own location information by Global Positioning System (GPS) or by any other methods and must be aware of its neighbor node's location, which are one-hop away from it, and must be aware of the location of a destination node. An investigate about location-based routing protocols in WSN such as Geographic and Energy-Aware Routing (GEAR) and Geographic Adaptive Fidelity (GAF) was presented in [10]. Routing protocols should calculate the distance between two particular nodes to estimate energy consumption. In [11] compare several location-based routing protocols in WSN such as Greedy Perimeter Stateless Routing (GPSR), closest with Forwarding Protocol (NFP), closest Closer Protocol (NC), Dijkstra-based Localized Energy-efficient Multicast Algorithm (DLEMA).

Location based routing protocols need to consume a lot of energy to transmit location information. In addition, the execution of geographical routing depends on correct reading of the GPS. If GPS given a wrong location this causes a fault in routing this causes loss of data .Sensor nodes whose GPS fails become useless. In addition, the GPS or any other location device need energy and the sensor nodes have a limited power source and network may contain thousands of node GPS lead to increases network cost [12].

2.3 Hierarchical Routing

Hierarchical routing protocols are planned to improve network scalability and energy efficiency through node clustering. In a hierarchical routing, the sensor network is divided into a cluster. Low-energy nodes act as cluster members sensing the environment and send data to the cluster head (CH) while the higher-energy nodes act as a CH. The CH aggregate data from a cluster member, and send aggregate data to the Base Station this method decrease the number of transmitted message to the base station (BS) [13].

Low Energy Adaptive Clustering Hierarchy

ISSN: 2456 - 3935
International Journal of Advances in Computer and Electronics Engineering
Volume 3, Issue 10, October 2018, pp. 7–12

(LEACH) protocol [14] is considered the most famous hierarchical routing protocol for WSN. LEACH selects sensor nodes to act as CH in each round randomly in such a way that each node in the network will operate as a cluster head and rotates this role to balance the energy conception of nodes. Cluster heads ratio is estimated to be 5% of the total number of nodes in the network. LEACH works in rounds each round consisting of two phases, the setup phase and the steady-state phase. In the setup phase, the CHs are selected. In the steady-state phase, the data is transferred to the BS. In set-up phase, the node choosing a random number between 0 and 1. The node becomes a cluster head for the current round if the number is less than the threshold T (n) as shown in Eq. (1).

$$T(n) = \begin{Bmatrix} \frac{P}{1-P\left(r \mod \frac{1}{p}\right)} & if\ n \in G \\ 0 & otherwise \end{Bmatrix} \quad (1)$$

where, p a percentage of cluster heads, r the current round, and G the set of nodes that have not been cluster heads in the last $1/p$ rounds. CH broadcasts the advertisement message for announcing all the neighbors to invite them to join the cluster for the current round. A node becomes a member of cluster in case it receives one advertisement message from one CH. Nodes may receive more than one advertisement message from many CHs in the network and decide which cluster to be joined based on the received Radio Signal Strength (RSS). The CH will create a cluster and use TDMA schedule when a member node transmits the sensed data. In the steady-state phase, the sensor nodes start sensing the environment and sending data to the cluster heads. The CHs collect data from the member in their cluster and transmitting these data to the BS.

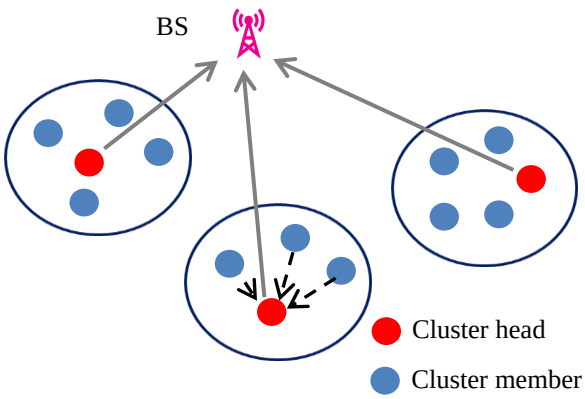

Figure 1 Hierarchical architecture of LEACH

Figure 1 represents the architecture of LEACH. The network reiterations the setup phase to start new round and choose a new node to act as CH at the end of the steady state phase. The LEACH reduces the power consumption by clustering and increases the network lifetime. LEACH has achieved the reduction factor of 7 in the dissipation of energy over direct communication and 4–8 factors over the minimum transmission in the energy routing protocol.

Continually, only the CHs are active during the steady-state phase. During the setup phase and allocated time slot, a cluster member in the cluster is active. This leads to reduce energy depletion of sensor nodes and save more energy to increase network lifetime. However, LEACH uses single-hop routing where each node sends data directly to the CH and CH sends data directly to the sink. Therefore, it is not appropriate to networks deployed in wide areas. In addition, choose CH randomly without relying on the remaining energy at the CH and the distance between the CH and the BS.

Many algorithms have been proposed to develop LEACH protocol such as LEACH-C [15], LEACH-E, OLEACH [16] and LEACH-B [17]. The CH is selected according to residual energy of sensor nodes to increase the lifetime of WSN. However, not take into account sensor nodes closer to BS die earlier because these nodes are always chosen to access the BS. In [18], the author proposed a Hybrid Energy-Efficient Distributed clustering protocol (HEED) that used residual energy and node density (i.e. number of neighbors) as a metric for cluster selection to achieve power balancing. Because LEACH randomly selects CHs, HEED clustering increases the network lifetime more than LEACH clustering. In [19], the author proposed cluster based protocol using the Particle Swarm Optimization (PSO) algorithm considers the distance between the CH and member, and the remaining energy of CH as a metric in the cluster head selection.

The authors in [20] have suggested distributed routing algorithms and clustering. Residual energy of the CHs, distance from the CHs to the BS, and distance between the members to their CHs, are consider the cluster formation. In [21] the author improve LEACH protocol, and propose energy-LEACH and multihop-LEACH protocols. Energy-LEACH protocol modify the way of a choice CH, nodes have more residual energy select as CH into next round. Multihop-LEACH protocol makes the communication between CH and BS multi-hop instead of single hop to overcome the problem of long distance communication and save more energy. Simulation results prove that energy-LEACH and multihop-LEACH protocols have better performance than LEACH protocols. In [22], the author proposed a new modified enhanced LEACH algorithm in which threshold value is calculated for next round and considered the total node energy of the network as shown in Eq. 2.

ISSN: 2456 - 3935
International Journal of Advances in Computer and Electronics Engineering
Volume 3, Issue 10, October 2018, pp. 7–12

$$T(n) = \left\{ \frac{P}{1-P\left(r \bmod \frac{1}{p}\right)} \times \frac{Eo}{Etotal} \right\} if\ n \in G \qquad (2)$$

where, Eo is the initial energy of node and E_{total} is the sum of energy level of all nodes. A comparison between traditional LEACH and proposed LEACH is done based on the network lifetime. The implementation of the protocol is done using MATLAB. In [23], authors proposed routing algorithm, I-LEACH which selects sensor nodes to act as cluster heads according to higher residual energy, more neighbors, and lower distance from the Base Station (BS) and the WSN lifetime is increased compared to LEACH and LEACH-C algorithms. To overcome the problem of earlier energy drop of nodes that closer to the BS the author in [24], propose an unequal cluster size (UCS) algorithm to balance energy dissipation among nodes where each cluster contains a different number of member according to the distance to BS. The authors in [25] use shortest path tree based data collection network architecture and demonstrated implementation of a cluster based to increase network lifetime where every node find shortest path depend on RSS and residual energy of nodes. In [26], [27], the author survey and analyze different hierarchical routing protocols that are being modified from LEACH. Power-Efficient Gathering in Sensor Information Systems (PEGASIS) [28], is a hierarchical routing protocol provide to improve the LEACH protocol. PEGASIS makes a chain of sensor nodes instead of clusters as exposed in Figure. 2. Sensor nodes select a next hope according to nearest neighbors in the chain. The constructing of the chain starts from the distant nods to the BS.

In the chain, every node simply keeps track of its next neighbor and previous neighbor. Communication in the chain is accomplished consecutively; each node within a chain collections transmit and receive from a neighbor and only one node is selected from the chain to act as a chain leader to transmit to the BS.

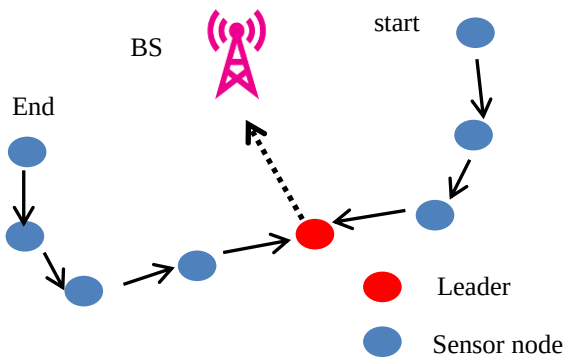

Figure 2 Chain of PEGASIS

Threshold Sensitive Energy Efficient Sensor Network Protocol (TEEN) [29], is a hierarchical clustering protocol, The sensors sensed data and send to their CH. The CH transmit collected data to higher level CH until the data reaches the BS as shown in Figure 3.The cluster head broadcasts two thresholds to the nodes: hard and soft thresholds for sensed attributes. If the hard threshold (HT) is exceeded, the sensor node sends its data to the cluster head, otherwise, the sensor node does not transmit the data in case the difference between sensing data does not exceed the soft threshold. TEEN is based on fixed threshold limits; it is unsuitable in case the user requires data on the regular basis.

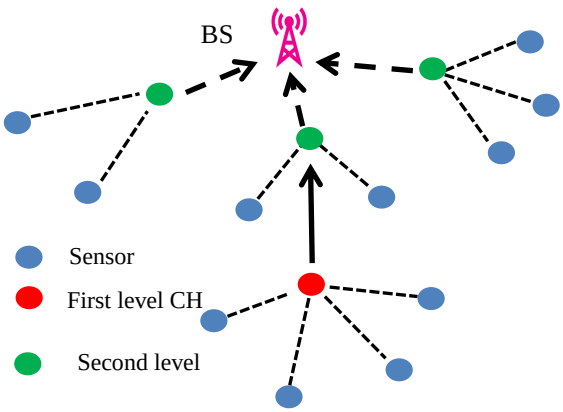

Figure 3 Hierarchical architecture of TEEN

3. CONCLUSION

The purpose WSN routing protocols is to find the best path that needs less energy from source to destination. In this paper, a discussion of a different routing protocol with focus on the energy efficient routing protocol designed for WSNs to increase network lifetime is presented. The study shows that the hierarchical protocols is the most efficient and more suitable for WSN applications because they have ability to limited energy resource.

REFERENCES

[1] Mohammad Abdul Matin, and M.M. Islam, "Overview of wireless sensor network", *Wireless Sensor Networks-Technology and Protocols*: InTech, 2012.

[2] Naveen Raman, Sivakumar Sabapathy Arumugam, Munuswamy Cholavendan, Thiyagarajan aswini, Santhana Krishnan Koushika, Velusamy Elango, RamaKrishnan Elangovan "E-Health Card With Patient Monitor Using Wireless Sensor", *International Journal of Advances in Computer and Electronics Engineering*, Vol. 3, No. 8, pp. 1-8, August 2018.

[3] Roxanne Hawi, "Wireless Sensor Networks-Sensor Node Architecture and Design Challenges", *International Journal*

of Advanced Research in Computer Science, Vol. 5, No. 1, pp. 47-53, Febuary 2014.

[4] B. Mala Sruthi, S. Jayanthy "Remote Monitoring of Agricultural Land Using Wireless Sensor Nodes", *International Journal of Advances in Computer and Electronics Engineering*, Vol. 2, No. 9, pp. 13-21, September 2017.

[5] Nikolaos A. Pantazis, Stefanos A. Nikolidakis, and Dimitrios D. Vergados, "Energy-efficient routing protocols in wireless sensor networks: A survey", *IEEE Communications surveys and tutorials*, Vol. 15, No. 2, pp. 551-591, July 2013.

[6] Jamal N. Al-Karaki, and Ahmed E. Kamal, "Routing techniques in wireless sensor networks: a survey", *IEEE Wireless Communications*, Vol. 11, No. 6, pp. 6-28, December 2004.

[7] Hassan Echoukairi, Khalid Bourgba, and Mohammed Ouzzif "A Survey on Flat Routing Protocols in Wireless Sensor Networks", *Advances in Ubiquitous Networking*, ,pp. 311-324: Springer, 2016.

[8] Wendi Rabiner Heinzelman, Joanna Kulik, and Hari Balakrishnan, "Adaptive protocols for information dissemination in wireless sensor networks ", In Proceedings of the 5th annual ACM/IEEE international conference on Mobile computing and networking, pp. 174-185, August 1999.

[9] Chalemek Intanagonwiwat, Ramesh Govindan, and Deborah Estrin, "Directed diffusion: A scalable and robust communication paradigm for sensor networks", In Proceedings of the 6th annual international conference on Mobile computing and networking, pp. 56-67, August 2000.

[10] G.V Rama Lakshmi, and V. Srikanth, "Location-Based routing protocol in wireless sensor network-A survey", *International Journal of Advanced Research in Computer Science and Software Engineering*, Vol. 5, No. 4, pp. 663-667, 2015.

[11] Ning Cao, Yingying Wang, Jianrui Ding, Chuanai Zhou, Yan Li, Yuanyuan Zhang, Xiaoling Wang, Chao Li, and Hongjun Li, "The Comparisons of Different Location-Based Routing Protocols in Wireless Sensor Networks", In International Conference on IEEE Computational Science and Engineering (CSE) and Embedded and Ubiquitous Computing (EUC), Vol. 2, pp. 324-327, August 2017.

[12] Ian Fuat Akyildiz, and Mehmet Can Vuran, "*Wireless sensor networks*", John Wiley & Sons, 2010.

[13] Ning Cao, Mei Wu, Yingying Wang, Xiaoling Wang, Guangsheng Cao, and Gang Wang, "The Comparisons of Different Hierarchical Routing Protocols in Wireless Sensor Networks" , In International Conference on IEEE Computational Science and Engineering (CSE) and Embedded and Ubiquitous Computing (EUC), Vol. 2, pp. 310-315, August 2017.

[14] Ian Fuat Akyildiz, Weilian Su, Y. Sankarasubramaniam, and E. Cayirci, "A survey on sensor networks", *IEEE Communications magazine*, Vol. 40, No. 8, pp. 102-114, November 2002.

[15] Wendi B. Heinzelman, Anantha P. Chandrakasan, and Hari Balakrishnan, "An application-specific protocol architecture for wireless microsensor networks", *IEEE Transactions on wireless communications*, Vol. 1, No. 4, pp. 660-670, December 2002.

[16] Salim EL Khedir, Nejah Nasri, Anne Wei, and Abdennaceur Kachourid, "A new approach for clustering in wireless sensors networks based on LEACH", *Procedia Computer Science*, Vol. 32, pp. 1180-1185, 2014.

[17] Mu Tong, and Minghao Tang, "LEACH-B: An improved LEACH protocol for wireless sensor network" , In 6th IEEE International Conference on Wireless Communications Networking and Mobile Computing (WiCOM), pp. 1-4, October 2010.

[18] Ossama Younis, and Sonia Fahmy, "HEED: a hybrid, energy-efficient, distributed clustering approach for ad hoc sensor networks", *IEEE Transactions on Mobile Computing*, Vol. 3, No. 4, pp. 366-379, October 2004.

[19] N. M. Abdul Latiff, C. C. Tsimenidis, and B. S. Sharif, "Energy-aware clustering for wireless sensor networks using particle swarm optimization", In 18th IEEE International Symposium on Personal, Indoor and Mobile Radio Communications, PIMRC, pp. 1-5, December 2007.

[20] Md Azharuddin, Pratyay Kuila, and Prasanta K. Jana , "Energy efficient fault tolerant clustering and routing algorithms for wireless sensor networks", *Computers & Electrical Engineering*, Vol. 41, pp. 177-190, January 2015.

[21] Fan Xiangning, and Song Yulin, "Improvement on LEACH protocol of wireless sensor network", In IEEE International Conference on Sensor Technologies and Applications, SensorComm, pp. 260-264, December 2007.

[22] Saiqua Anam, and Om Prakash Yadav, "Performance enhancement of leach protocol in wireless sensor network in terms of network life time", *International Journal for Technological Research in Engineering*, Vol. 4, No. 7, pp. 1060-1063, March 2017.

[23] Zahra Beiranvand, Ahmad Patooghy, and Mahdi Fazeli, "I-LEACH: An efficient routing algorithm to improve performance and to reduce energy consumption in Wireless Sensor Networks", In 5th IEEE Conference on Information and Knowledge Technology (IKT), pp. 13-18, October 2013.

[24] Stanislava Soro, and Wendi B. Heinzelman, "Prolonging the lifetime of wireless sensor networks via unequal clustering", In Proceedings of 19th IEEE International Parallel and Distributed Processing Symposium, pp. 1-8, April 2005.

[25] Kandasamy Varatharajalu, Divya Ragu, "Design and Implementation of a Soil Moisture and Temperature Monitoring using Wireless Sensor Network", *International Journal of Advances in Computer and Electronics Engineering*, Vol. 3, No. 3, pp. 1-7, March 2018.

[26] D. Rajendra Prasad, P. V. Naganjaneyulu, and K. Satya Prasad, "Modified LEACH Protocols in Wireless Sensor Networks: A Review", In Proceedings of 2nd International Conference on Micro-Electronics, Electromagnetics and Telecommunications. Springer, Singapore , pp. 681-688, September 2017.

[27] G. Rama Subba Reddy, and S. Balaji, "A Review on Different Types of LEACH Protocol for Wireless Sensor Networks", *International Journal of Scientific Research in Computer Science, Engineering and Information Technology, IJSRCSEIT*, Vol. 2, No. 4, pp. 840-844, August 2017.

[28] Stephanie Lindsey, and C. S. Raghavendra, "PEGASIS: Power-efficient gathering in sensor information systems", In IEEE Aerospace conference proceedings, Vol. 3, pp. 1125-1130, March 2002

[29] D. Agarwal, and A. Manjeshwar, "TEEN: a protocol for enhanced efficiency in wireless sensor networks", in the 1st IEEE International Workshop on Parallel and Distributed Computing Issues in Wireless Networks and Mobile Computing, San Francisco, pp. 2009-2015, 2001.

ISSN: 2456 - 3935
International Journal of Advances in Computer and Electronics Engineering
Volume 3, Issue 10, October 2018, pp. 7–12

Authors Biography

Sara Raed received the B.Sc. degree in Computer Engineering from Mosul University, Mosul, Iraq, in 2013. She is currently working toward the M.Sc. degree in Computer Engineering at the College of Engineering in Mosul University. She is interested in doing research in wireless sensor networks, energy-efficient communication protocols for WSNs, cross-layer design for WSNs and Internet of Thing.

Salah Abdulghani Alabady received the Ph.D. degree in computer engineering/wireless networks from the School of Electrical and Electronic Engineering, Universiti Sains Malaysia, Pulau Pinang, Malaysia, in 2014. From 1999 to 2010, he was a Lecturer with the Computer Engineering Department, University of Mosul, Iraq, where he is currently a Senior Lecturer. From 2011 to 2014, he was a Research Assistant in wireless networks with the School of Electrical and Electronic Engineering, Universiti Sains Malaysia. His research interests include wireless channel coding, joint channel-network coding, error correction codes, and cross layer of wireless sensor networks.

Cite this paper:

Sara Raed Abd, Salah Abdulghani Alabady, "Energy Efficient Routing Protocol for Wireless Sensor Networks: Survey", International Journal of Advances in Computer and Electronics Engineering, Vol. 3, No. 10, pp. 7-12, October 2018.